FE/Sem-I/NEP 2020/Winter 2025(29-12-2025)

Time: 2 Hrs

Max. Marks: 60

N. B. (1) Question No.1 is compulsory.
(2) Attempt any 3 questions from remaining five questions.
(3) Assume suitable data if necessary and mention the same clearly.
(4) Take g = 9.81 m/s².

Q1. Solve any Five

a) A car is made to move by applying resultant force R=2000N along the x-axis. This resultant is developed due to two pulling forces F_1 and F_2 on two ropes as shown in figure. Determine the tension in individual ropes. (03)

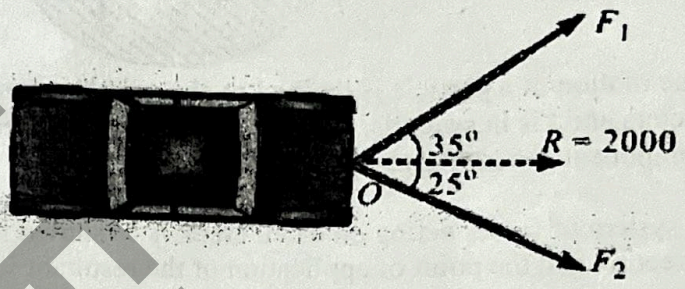

b) For the member shown in figure find the magnitude and direction of the resultant reaction at the hinged support A. (03)

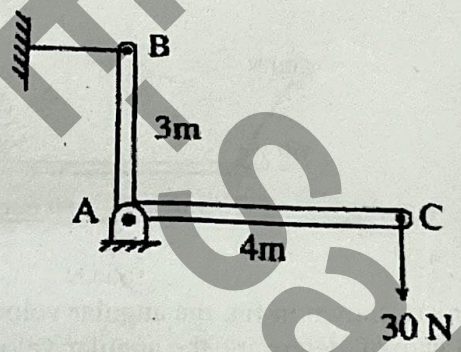

c) Prove that angle of friction is equal to angle of repose. (03)

d) A force 30 N is acting at point P (3, 2, 1) m. The force makes 35⁰ & 85⁰ with x & y axes respectively. Express the force in vector form. (03)

e) The acceleration of the particle is defined by the relation $a = 25 - 3x^2\ mm/s^2$ .The particle starts with no initial velocity at the position x = 0. Determine the position where the velocity is maximum and the corresponding maximum velocity. (03)

f) A cricket ball of mass 0.15 kg is moving with a velocity of 20 m/s. A player catches it and brings it to rest in 0.1 s. Find the impulse and average force applied. (03)

RGIT-Ansy08

FE/SEM-I / NEP-2020/WINTER 2025/29-12-25

Q 2 A) Find the coordinate of the centroid for the shaded part of the lamina with respect to given reference axis. (07)

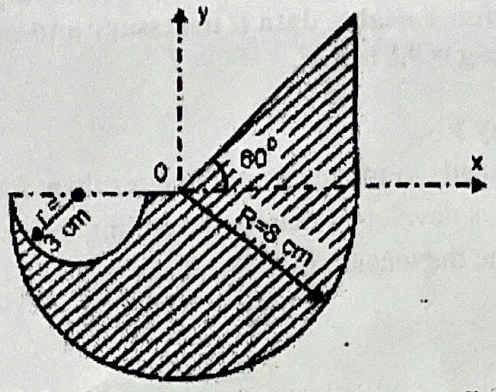

B) The motion of a particle is defined by the position vector, $\bar{r} = 5ti + 3t^2j$ where 'r' is in meters and t is in seconds. At the instant when t = 2 sec, find i) Tangential and normal components of accelerations ii) Radius of curvature. (08)

Q 3 A) A system of forces acting on a bell crank is as shown in fig. Determine the magnitude, direction and the point of application of the resultant w.r.t. O. (07)

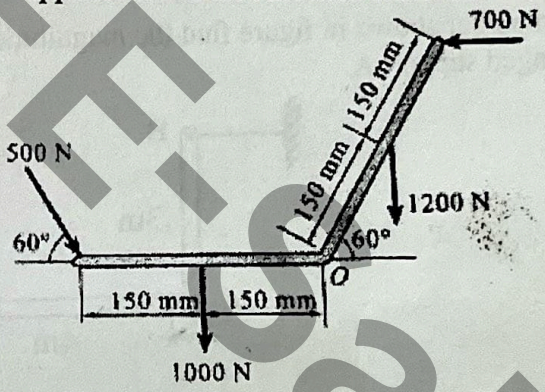

B) In the mechanism shown in fig, the angular velocity of link AB is 5 rad/sec anticlockwise. At the instant shown, determine the angular velocity of link BC and velocity of piston C. (08)

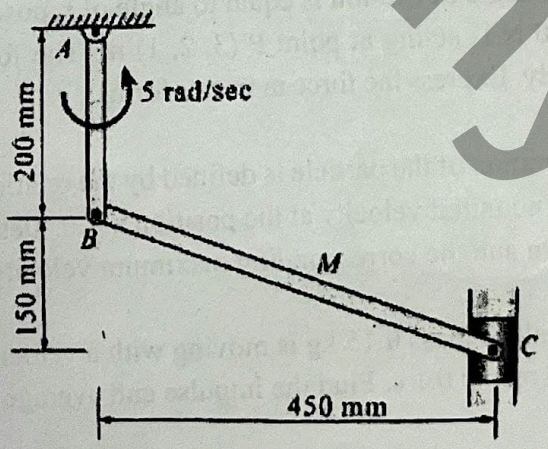

RGIT Eganyog

FE/Sem-I/NEP2020/Winter 2025/(29-10-2025)

3

Q 4. A) Determine the force P applied at 30^0 to the horizontal just necessary to start a roller having 50 cm radius over a 12 cm high obstruction, if the roller is of 100 kg mass. Also find the magnitude and direction of P when it is minimum. (07)

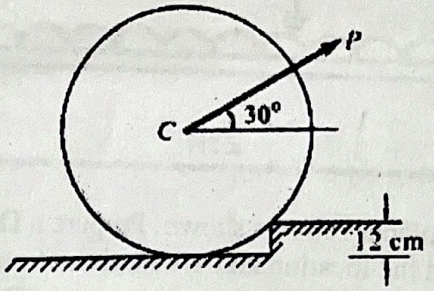

B) The system shown in figure is initially at rest. Neglecting friction determine the force 'P' required if the velocity of the collar B is 5 m/s after 2 sec and corresponding tension in the cable. (08)

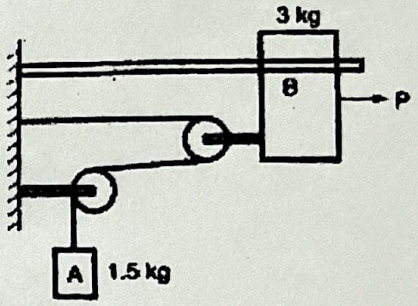

Q 5. A) Find the force *P* required to pull block *B* shown in figure. Coefficient of friction between *A* and *B* is 0.3 and between B and floor is 0.25. Mass of *A* = 20 kg and *B* = 30 kg. (07)

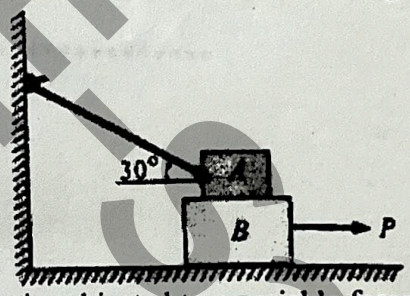

B) A 3 kg mass kept on a 30° slope is subjected to a variable force $P = (t^2+3)$, where P is in 'Newton' and t is in 'second' find velocity of the block after 5 second using Impulse momentum principle. At t = 0, V = 0. (08)

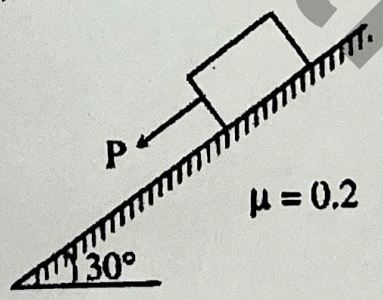

RGTU Exam Yogi

FE/SEM-I/NEP 2020/WINTER 2025/29-12-25

Q 6. A) For the beam loaded as shown in figure, Calculate the support reactions. (07)

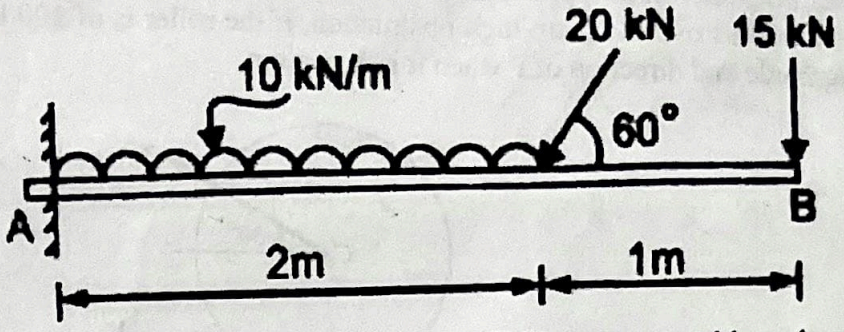

B) A simple 2 DOF planar robot is shown. Prepare a D H parameter table and perform forward kinematics to find the location and orientation of end effector B. (08)

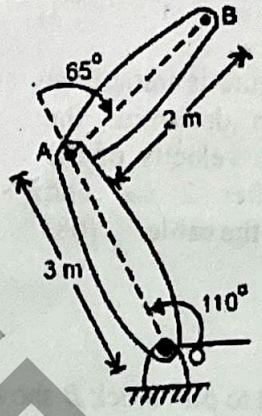

****

RGIT-FE-Sahyog