MANJARA CHARITABLE TRUST

RAJIV GANDHI INSTITUTE OF TECHNOLOGY, MUMBAI

Department of Applied Sciences & Humanities

INTERNAL ASSESSMENT (IA) - II

Date: 16/4/25

Duration: 1.5Hr

Max. Marks: 20
Class: F. E. SEM -II
Name of the Course: Engineering Graphics
Branch: ALL

Instructions:

1. All Questions are compulsory
2. Figures to the right of the question indicate full marks.
3. Assume the suitable dimension wherever necessary.

Questions	Max Marks	Bloom's Taxonomy Level	Course Outcomes
Q1. Draw the Isometric view from the given Orthographics views. Refer Fig.1	6	3	CO6
Q2. A hexagonal pyramid base 25 mm side , axis 55 mm long has its base on HP, with an edge of base parallel to VP. A section plane perpendicular to VP and inclined at 60° to HP bisects the axis of pyramid. Draw FV, sectional TV, true shape of the section. **OR** Draw Sectional FV and TV. Refer Fig.2	9	3	CO4 CO5
Q3. Draw FV and TV of the block shown. Refer Fig.3	5	3	CO5

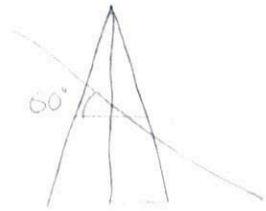

PTO for Figures

RGIT FE-Sahyog

FIGURES

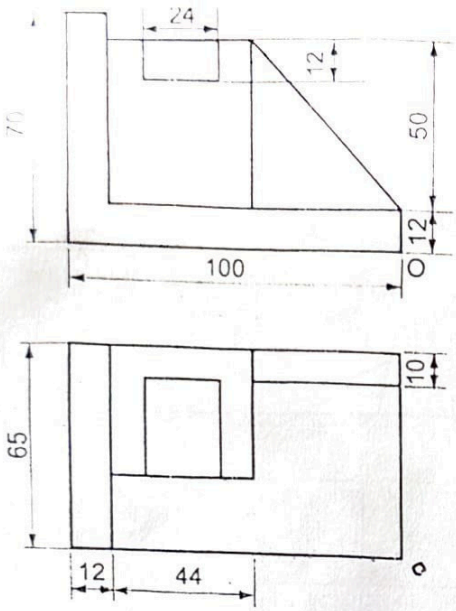

FIG.1

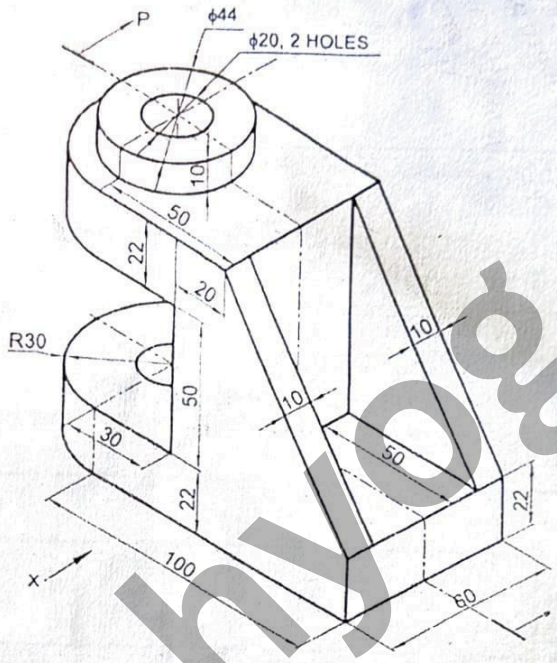

FIG.2

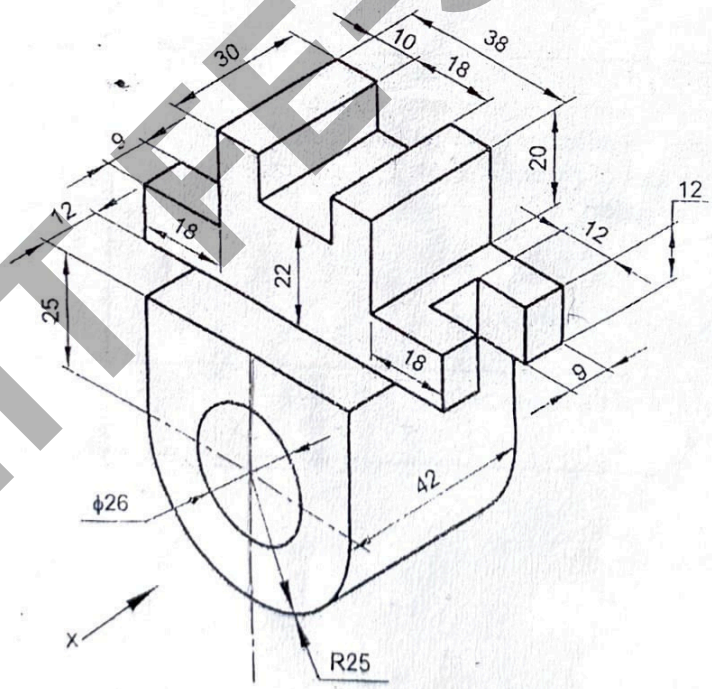

FIG.3

RGITTE-Sahyog